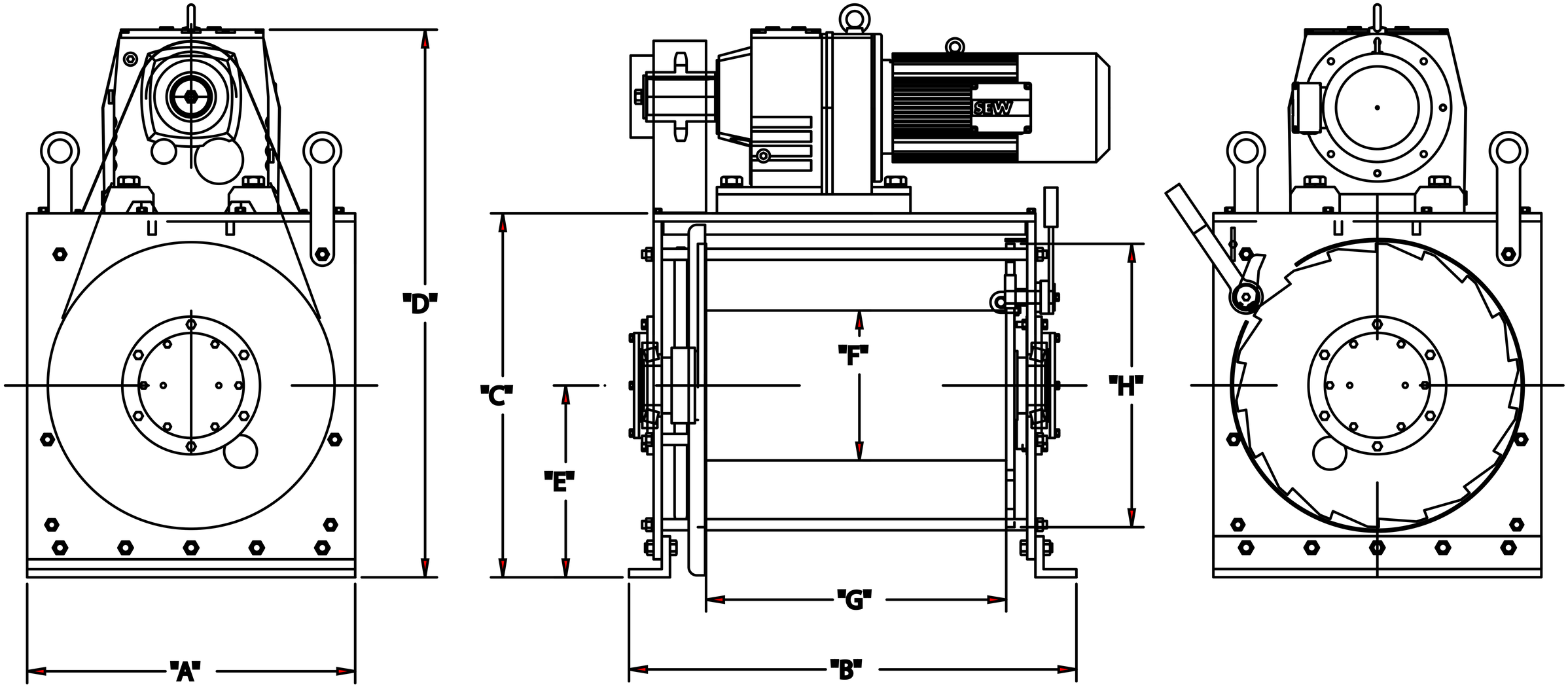

BMW-CD	Length "A"	Width "B"	Height "C"	Overall Height "D"	Drum CL Height "E"	Drum Dia. "F"	Drum Width "G"	Flange Dia. "H"
18" Model	32"	36"	35"	55"	16"	14"	18"	30"
24" Model	39 $\frac{1}{2}$"	41 $\frac{3}{4}$"	43 $\frac{3}{4}$"	63 $\frac{1}{4}$"	23"	18"	24"	34"
36" Model	39 $\frac{1}{2}$"	53 $\frac{3}{4}$"	43 $\frac{3}{4}$"	65 $\frac{3}{4}$"	23"	18"	36"	34"